CROSS LAMINATED TIMBER FEASIBILITY STUDY

A comparison between cross laminated timber and cast-in-place concrete framing for mid-rise urban buildings

February 2018

Cary Kopczynski & Company
Seattle • San Francisco • Chicago
www.ckcps.com

TABLE OF CONTENTS

<u>Note</u>: This study was conducted with industry information available at the time of publication. The reader is advised to use judgement when drawing conclusions from the data presented, since the number of Cross Laminated Timber structures built to date in North America is limited.

I. INTRODUCTION

This study was undertaken to provide a comparison between Cross Laminated Timber (CLT) and cast-in-place concrete as structural framing systems for mid-rise buildings in the United States. The focus was primarily on structural design, structural cost, and constructability. Consideration was also given to sustainability and fire & life safety.

A layout representative of an urban mid-rise multifamily residential building was used to develop the structural design for both options considered. The floor plan is approximately 12,000 square feet, with living units varying in size from 750 square feet to 1,100 square feet (reference Figures A1 through A6 in the attached Appendix). The building is ten stories tall, with an assumed typical floor-to-ceiling height of 9'-0".

The structural design assumed standard residential live loads and 115 mph wind loads as defined by the *2015 International Building Code* and ASCE/*SEI 7-10 Minimum Design Loads for Buildings and Other Structures*. A wind governed lateral design was assumed, with alternate considerations given for seismic design.

II. OBJECTIVES

CLT and cast-in-place concrete are structural materials with different performance characteristics, the design and detailing of which is primarily the responsibility of the structural engineer. The behavior of different structural systems varies – considerably in some cases – under vertical and lateral loading. Further, the relative impact of load-dependent and time-dependent movement; for example, vertical shortening under gravity load, plays a role in selection of framing systems. Accordingly, the primary focus of this study was on structure, with a secondary focus on other characteristics.

Objectives for the structural evaluation of each building frame were to compare the two systems relative to structural performance, constructability, and cost. The performance evaluation included both strength and serviceability. The constructability and cost evaluation included consideration of the erected structural frame, as well as system specific additional considerations.

Other important building performance considerations were also reviewed. These included carbon footprint, energy efficiency, and fire & life safety.

III. DESIGN

Two structural options for the hypothetical mid-rise residential building were studied. A description of the systems follows. Reference the Appendix for an illustration of each option.

Cross Laminated Timber Option

The CLT building considered is a bearing wall system with the walls utilized for both gravity and lateral loads (reference Figures A1, A3 and A4 in the Appendix). Walls are 6 7/8" thick 5-lam assemblies, assuming 1-3/8" thick laminations of structural grade softwood timber (a standard size for U.S. manufactured CLT). Similarly, the floor panels are typically 6 7/8" 5-lam assemblies, with 9 5/8" thick 7-lam assemblies at the corner units where floor spans exceed 16'-0."

The lateral load path between floor and wall panels is resolved with steel angle clips fastened with structural screw anchors. Wall openings are assumed to be either integrated into the wall assemblies, or resolved with a structural composite lumber (SCL) beam. Exterior walls on the north and south sides of the building are considered to be non-load bearing, and do not require framing with CLT material. Balconies are assumed to be pre-manufactured components attached to the building frame.

Cast-In-Place Concrete Option

The cast-in-place concrete frame is a flat plate system with gravity columns and concrete shear walls (reference Figures A2, A5 and A6 in the Appendix). Slabs are 9" thick mild-reinforced normal weight concrete, spanning between 16" x 24" concrete columns at a spacing not exceeding 25'-0". Lateral support is provided by 12" thick concrete shear walls around the stair and elevator cores. Reinforcing is assumed to be Grade 60 per ASTM A615, and concrete is assumed to have a specified compressive strength f'_c of 5,000 psi for slabs, and 6,000 psi for walls and columns.

Except for shear walls, all interior and exterior walls were assumed to be non-load bearing and non-structural. Balconies were assumed to be either an extension of the floor slabs or pre-manufactured components attached to the building frame.

IV. SUMMARY OF FINDINGS

Structural Design

Each of the two options is suitable for the building type and layout chosen for this study. The vertical structural elements have adequate strength and stiffness to support the gravity and lateral loads, and each floor system has adequate strength and stiffness for the defined spans.

Cross Laminated Timber Option

The 6 7/8" thick, 5 - lam CLT wall panels assumed in this study have adequate strength and stiffness to support the gravity and lateral design loads, and the CLT floor panels of the same thickness have adequate strength and stiffness for the spans chosen. Of note, spans selected for the CLT option are shorter in some areas than those for the concrete option due to the vibration potential for CLT floor systems with longer spans. Floor vibration can be mitigated with a concrete topping slab. The topping slab may be required regardless, for fire resistance reasons.

An important design consideration for wood buildings is the control of vertical shortening under axial load. Axial shortening results primarily from cross-grain bearing, and the magnitude of shortening generally increases as the number of floor systems through which vertical loads are transmitted increases. For multistory wood buildings, the control of vertical shortening must therefore be addressed.

Several solutions for controlling the axial shortening of CLT buildings are feasible. These include balloon-framed assemblies with steel ledgers to support the floor system, hybrid columns with steel post assemblies through the floors to eliminate cross-grain bearing, and full height steel columns. For this study, the use of vertical CLT wall panels resulted in axial wall stresses of 270 psi at the base. Total vertical shortening, primarily from cross-grain shrinkage in the floor panels, is expected to be approximately 1", which was deemed acceptable.

For lateral loads, experience has shown that, although CLT wall panels can be used for combined axial and lateral loads as was done for this study, concrete shear walls are often more suitable. The reduced wall lengths resulting from the use of concrete improve interior design flexibility, especially for office buildings where open floor layouts are desirable. Further, concrete walls facilitate the installation of elevators, elevator equipment, and steel or concrete stairs.

> *Seismic*: In high seismic regions, a concrete shear wall system is especially beneficial, since CLT has high elastic load demands due to the low seismic response modification factor, R.. A concrete shear wall layout similar to the cast-in-place concrete option could be used for the building layout studied. Engineered wood or structural steel columns, with or without beams (depending on the number of columns added), would be necessary for the gravity load carrying system. Horizontal framing would remain CLT.

For buildings taller than approximately five stories, the above considerations may result in CLT being used in the horizontal framing system only. Walls and columns in these buildings would be constructed in concrete and/or structural steel.

Cast-in-Place Concrete Option

Cast-in-place concrete is a proven structural system for multifamily buildings. Flat plate slabs are easily adaptable to a wide range of room layouts, concrete shear walls are suitable for both wind and seismic loads, and concrete materials are readily available in most markets.

The framing system chosen for this study, which included 9" thick mild reinforced slabs, 16" x 24" columns, and 12" thick walls proved satisfactory, from the standpoint of both strength and stiffness, for the floor spans and building layout evaluated.

The traditional nature of the layout studied produced acceptable structural results. Total slab deflections are less than l/400 for combined dead and live load, which is well within ACI and IBC limits. Strength requirements for gravity and lateral loading are satisfied with the ASTM A615 Grade 60 rebar assumed. A taller building would benefit from higher strength rebar in the foundations and possibly elsewhere, but high strength rebar was not found to be cost effective for the building evaluated.

The lateral force resisting system of 12" thick shear walls proved adequate for wind design, based on an assumed wind speed of 120 mph.

> *Seismic*: In high seismic regions, shear walls thicker than 12" may be required due to the higher load demands. Shear wall capacities could also be increased by raising concrete compressive strength from 6,000 psi to a higher value. Additionally, the increased foundation requirements from combined gravity and seismic loading would likely result in Grade 80 foundation rebar being more cost effective than Grade 60.

Cost & Constructability

Cross Laminated Timber and Cast-in-Place Concrete Options

The reader is again advised to use judgement when drawing conclusions from the data presented in this report. This is especially true for cost and constructability, since the available CLT information is limited and costs vary widely from region to region.

In the Pacific Northwest, based on a survey of contractors knowledgeable in CLT, the cost of the erected CLT Option was estimated to be $48 to $56 per gross square foot, excluding costs for acoustical considerations and additional fire protection. Depending on the permitting jurisdiction and other factors, acoustical and added fire protection costs could be expected to range from $2 to $6 per square foot.

The completed structural frame cost for the concrete option is estimated to range from $42 to $46 per gross square foot. Supplemental fire protection would not be required. At sensitive living areas with hard floor coverings, additional costs for acoustical dampening may be required, in the range of $1 to $2 per square foot.

The above costs include hoisting and prorated general conditions, but exclude the cost of exterior enclosure systems. Costs below under "*Additional CLT Cost Data*" also exclude exterior enclosure.

Additional Cross Laminated Timber Cost Data

Industrial Project: The structural frame cost for a recently constructed single story CLT industrial building in the southeastern US was $55 per square foot (Esler, 2015), excluding additional costs for acoustical considerations and fire protection.

Midwest Commercial Project: The structural frame cost for a two-story commercial building constructed in the Midwest was $60 per square foot for the combined CLT and glulam systems (Woodworks, 2012), excluding additional costs for acoustical considerations and fire protection. CLT and other wood products were used for both the horizontal and vertical framing members in these buildings.

Higher Education Project: The cost of a recently completed 18-story college dormitory structure in British Columbia, when compared to a traditional concrete frame, was estimated to be an additional $20 U.S. per gross square foot for the structural system, with an overall premium of $26 U.S. per gross square foot including concrete topping slabs, GWB wraps on columns and ceiling soffits for fire protection, and additional costs for timber moisture protection during construction (Urban One, 2017). This project utilized CLT floors, glulam columns, and concrete shear walls. Structural steel collars were used at columns where they pass through each floor.

Northwest Commercial Project: A four-story, 22,000 square foot CLT building nearing a construction start in Eugene, Oregon is estimated at a cost of $54 per gross square foot for the CLT/wood structural frame. CLT for this building is being used horizontally only; the vertical system is traditional wood construction.

Northwest Mixed-Use Project: A 12-story CLT midrise office and residential tower is under construction in Portland, Oregon. The project gross area is 90,000 square feet, with retail on the first floor, office space on floors two through six, sixty apartments on the upper floors, and a rooftop deck. The structural frame cost is estimated at approximately $65 per gross square foot. The structure consists of CLT floor panels supported on glulam beams and columns. The lateral force resisting system includes post-tensioned CLT shear walls. Some of the mass timber structure is unprotected. The project was awarded a grant from the U.S. Department of Agriculture, Softwood Lumber Board and Binational Softwood Timber Council to assist with costs of research, testing, and peer reviews.

Southeast Hotel Project: A four-story CLT hotel was completed in December 2015 at Redstone Arsenal, a United States Army post near Huntsville, Alabama. The structural frame cost for this project was unavailable. CLT was used for floor and wall panels, including stair shaft walls. Glulam beams and columns are also incorporated into the building structure. All CLT panels are protected with GWB, and the building was designed for blast resistance due to its location on a US military base.

A current challenge in the comparative cost estimating of CLT with other systems is that the database of completed CLT structures is small, making accurate cost assessments difficult. Nevertheless, the pricing information available to date shows that CLT structures are generally more costly than concrete structures. See Figure 1 below.

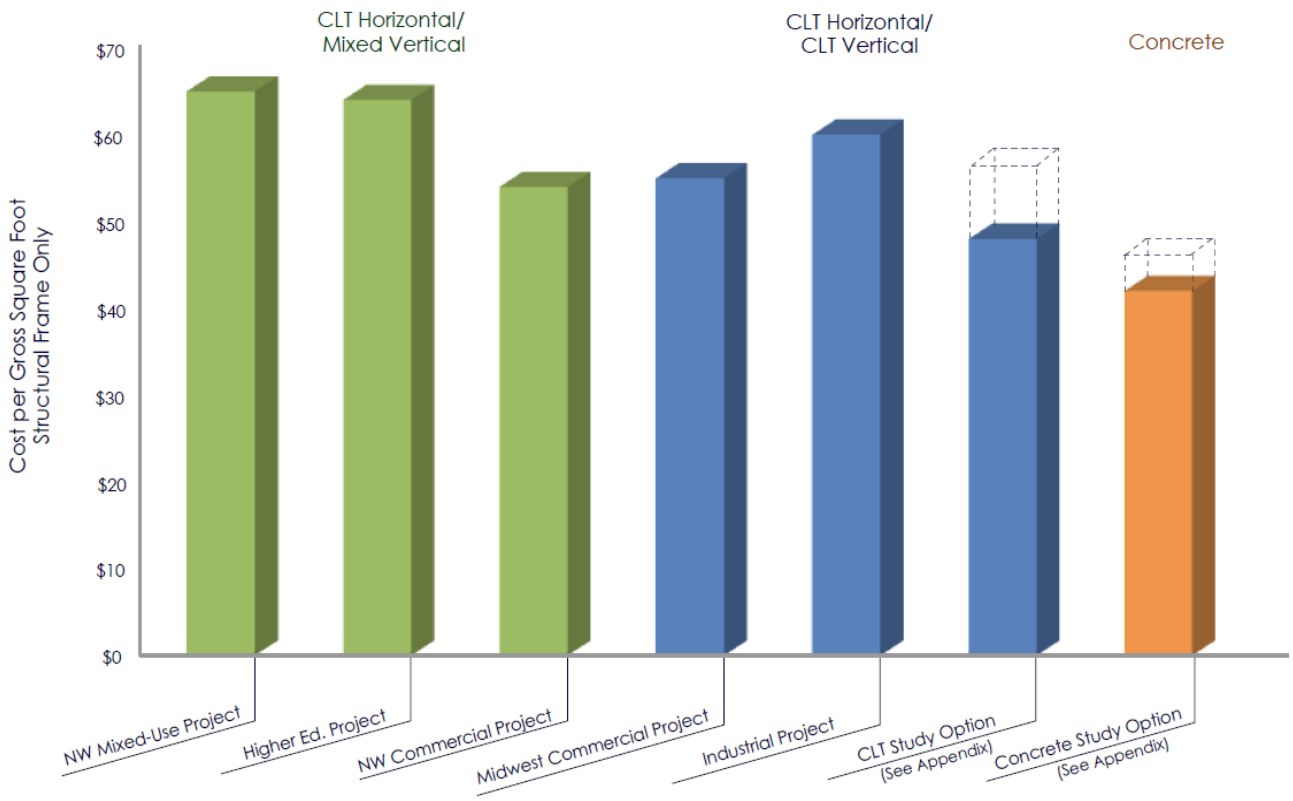

Figure 1: Relative Cost Comparison

Note: "Horizontal" refers to floor framing; "Vertical" refers to columns and walls; "Mixed Vertical" refers to mixed concrete, steel, and wood construction for vertical elements; and dashed areas indicate estimated cost ranges. CLT systems typically require added acoustical and fire protection costs, which are not included in Figure 1.

Sustainability

Wood production sequesters carbon and produces oxygen, while concrete production is carbon intensive. Per the US EPA, net carbon emissions from production of a metric ton of concrete are estimated at 250 kg, compared to framing lumber at approximately 50 kg, neglecting sequestered carbon. See Figure 2 below.

CLT is a renewable resource with highly favorable carbon emissions qualities when evaluated against most all other building materials, including concrete. It should be noted, however, that the consistency of early Life Cycle Assessments (LCAs) has been questioned (reference *Determining the Carbon Footprint of Wood* by Lorenz et al, 2016). Also, increasing effort is being directed toward identifying and reducing the carbon footprint of concrete materials. The development of Environmental Product Declarations (EPD) for concrete mixes is one example. Another is the work being done to advance the use of naturally occurring pozzolans as cement replacements (MIT Dept of CEE, 2018).

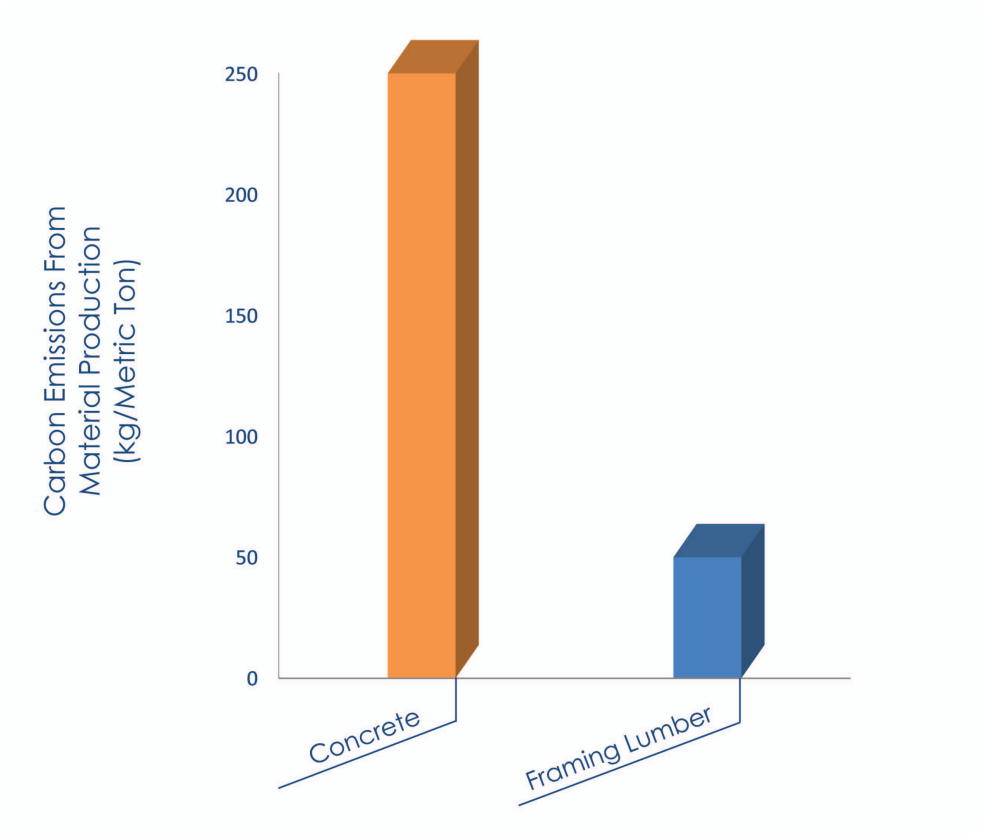

Figure 2: Carbon Emissions Comparison

Carbon emissions from material production, neglecting embodied carbon.

The energy consumption of a building is another important sustainability consideration. Energy consumption for buildings is usually divided into two categories: Embodied Energy (EE) and Operational Energy (OE). The EE of a building consists primarily of the energy expended for construction. OE is the energy consumed through daily building usage, including lighting, HVAC, and the operation of equipment and appliances.

The OE of a building often exceeds 95% of the total lifetime energy consumed, being even more pronounced in urban projects (reference *Life-Cycle Energy Implications of Downtown High-Rise vs. Suburban Low-Rise Living: An Overview and Quantitative Case Study for Chicago* by Peng Du et al, 2015). As buildings are constructed with more efficient MEP systems, the relative impact of EE will rise. Nevertheless, improving the energy efficiency of a building is achieved primarily by optimizing and reducing OE. See Figure 3 below.

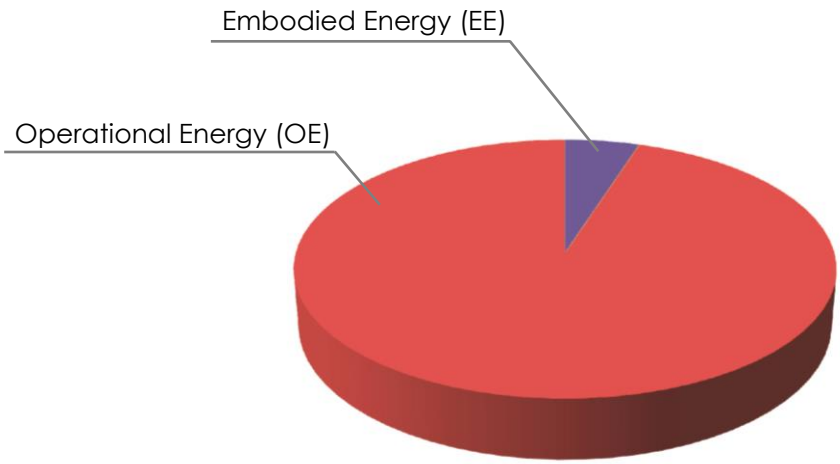

Figure 3: Energy Consumed By Buildings

The choice of structural material affects Embodied Energy. As can be seen, however, Operational Energy, which is relatively unaffected by the structural frame, is dominant. OE often exceeds 95% of total lifetime energy consumed by a building.

Fire & Life Safety

Testing indicates that CLT has acceptable fire characteristics due to the slow char rate of heavy timber framing. Nevertheless, supplemental fire protection is generally required. This supplemental protection would typically be in the form of gypsum sheathing for walls, columns, and ceiling soffits; and concrete topping slabs for floors.

Although the added cost of supplemental fire protection is difficult to quantify due to the evolving state of CLT fire resistance requirements, it can nevertheless be estimated within reasonable bounds. A review of recent projects indicates that the combination of gypsum sheathing and concrete topping slabs ranges in cost from $2 to $4 per square foot. These costs are not included in the pricing information provided in this report.

In addition to the supplemental fire protection described above, fire officials have further recommendations for CLT structures (Havel 2016). For example, masonry or concrete stair enclosures are deemed mandatory by many fire fighters if mass timber is to be used for mid and high-rise buildings. Also, similar to light wood framed structures, CLT structures will have concealed spaces for pipe chases, mechanical plenums, etc. Fire officials want sprinklers in these spaces to prevent rapid flame spread.

Another concern expressed by fire officials is that CLT buildings will become fire hazards at the end of their service life (Corbett 2016). There are numerous aging and abandoned heavy timber buildings throughout the country, and many cities have experienced fires in these buildings. The fire suppression systems are often no longer functional, which allows fire to spread quickly. Many of these existing buildings have non-combustible masonry exterior walls due to the former prevalence of bearing wall construction, which helps prevent fire from jumping to neighboring buildings. A future abandoned CLT building may not have a non-combustible enclosure, since exterior masonry and concrete bearing walls are no longer common.

The concrete option evaluated does not require additional fire protection measures or have the same end of life concerns. Concrete is non-combustible, and good fire resistance can be achieved through the use of appropriate concrete cover. This cover insulates the reinforcing steel from heat, with little to no additional cost to the structure. Further, fire resistance levels for concrete structures have been proven and documented over a long history of use, including exposure to actual fire events. The lack of experience in actual fire events for CLT structures requires further scrutiny.

Code Acceptance

The 2015 and 2018 editions of the International Building Code (IBC) allow CLT with the same height (1-6 stories depending on occupancy, construction type, and the inclusion of sprinklers) and area limitations as conventional wood and heavy timber framing. CLT is not specifically included in versions of the IBC prior to 2015. Nevertheless, if a jurisdiction is utilizing the IBC 2012 or earlier, CLT may still be permitted at the local code official's discretion through the use of Section 104.11. Similarly, taller CLT buildings may be permitted under IBC 2015/2018 using that same section. It is anticipated that allowable height and area increases for CLT buildings will be incorporated in the 2021 IBC.

Given the concerns from fire officials noted above, it is unknown whether local jurisdictions will accept future IBC provisions for CLT. Following the Edgewater fire of 2015, the New Jersey legislature is considering placing additional sprinkler requirements and restrictions on the height and area of wood buildings, beyond the requirements of the IBC (NJ A96). Construction of a 10-story CLT tower that was planned for New York City has been cancelled in part due to code limitations, along with lukewarm buyer and lender interest. Smaller municipalities have also placed restrictions on wood construction. In August of 2016, Sandy Springs, Georgia restricted the use of wood structures to buildings less than 100,000 square feet in area, and three stories in height. When considering a CLT structural system, the reader is advised to consult with local code officials regarding any special restrictions.

V. CONCLUSIONS

Conclusions resulting from this study follow.

1) Both systems studied – CLT and cast-in-place concrete – are suitable for the building evaluated, which was a hypothetical 10-story multifamily residential structure in the United States.

2) The buildings evaluated were assumed to be in regions where wind loading controls the lateral design. In high seismic zones, a structural reinforced concrete topping slab may be necessary on the CLT floor panels to connect the seismic inertial forces to the lateral force resisting elements.

3) For the multifamily residential building assumed in this study, the cost of a CLT structural frame is higher than a competing cast-in-place concrete structure. The margin will vary, depending on geographic region. The CLT Option cost is further increased by required acoustical and fire protection measures. With time, CLT may become more economical if availability, competition and contractor familiarity increase.

4) Wood production sequesters carbon and produces oxygen, while concrete production is carbon intensive. The carbon footprint of CLT is thus considerably lower. Increasing effort is being directed toward identifying and reducing the carbon footprint of concrete materials, the use of EPD's for concrete mix designs being one example.

5) The choice of structural material has limited impact on the total energy consumed over a building's life, since the structure affects only Embodied Energy – the energy required to produce the building's physical materials. Operational Energy – the energy required to heat, cool, light, and operate a building – is dominant, being upwards of 95% of the total energy consumed.

6) The concrete option has reliable data to document fire performance. For CLT, UL floor ratings are available up to 2 hours (UL L901 and M533) but the structural capacity must be reduced to 50% of the manufacturer's published values. Similarly, there are UL ratings for bearing walls for 1 or 2 hours (UL V329) but the axial load capacity of the walls must be reduced 30%.

7) For the ten story building evaluated, the concrete option is less susceptible to floor vibration under dynamic loads, and to excessive lateral drift under wind and seismic loads unless concrete shear walls are substituted for CLT walls in the CLT Option. Concrete shear walls in the CLT Option would require measures to control differential axial shortening between the concrete and gravity load carrying vertical wood elements.

8) Future trends in CLT buildings may include steel beams and columns, concrete or masonry shear walls, and CLT floor panels. Glulam beams and columns can be used in lieu of steel, as long as load capacity is adequate and vertical shortening is accounted for.

VI. APPENDIX

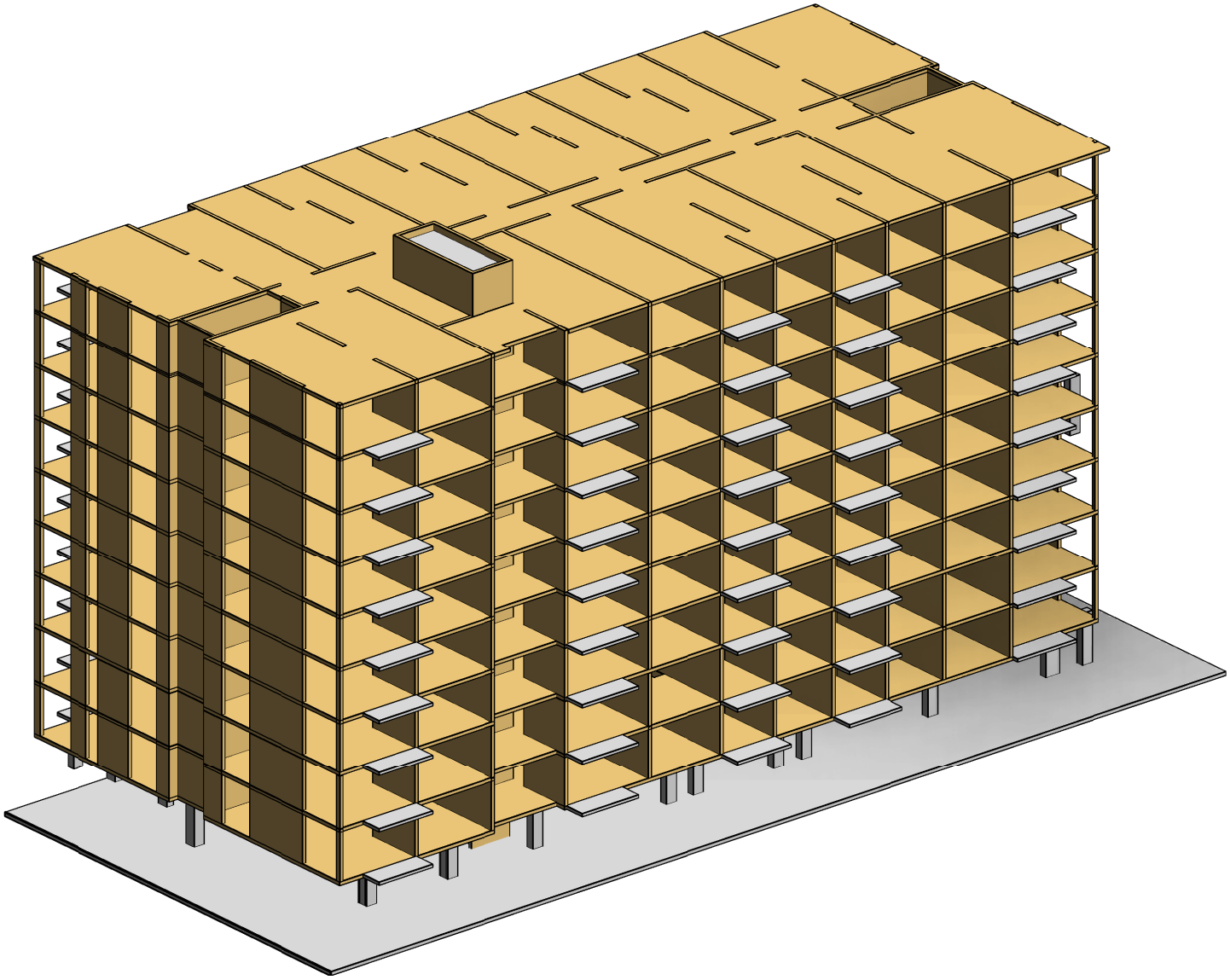

Figure A1 - Axonometric of Cross Laminated Timber Option

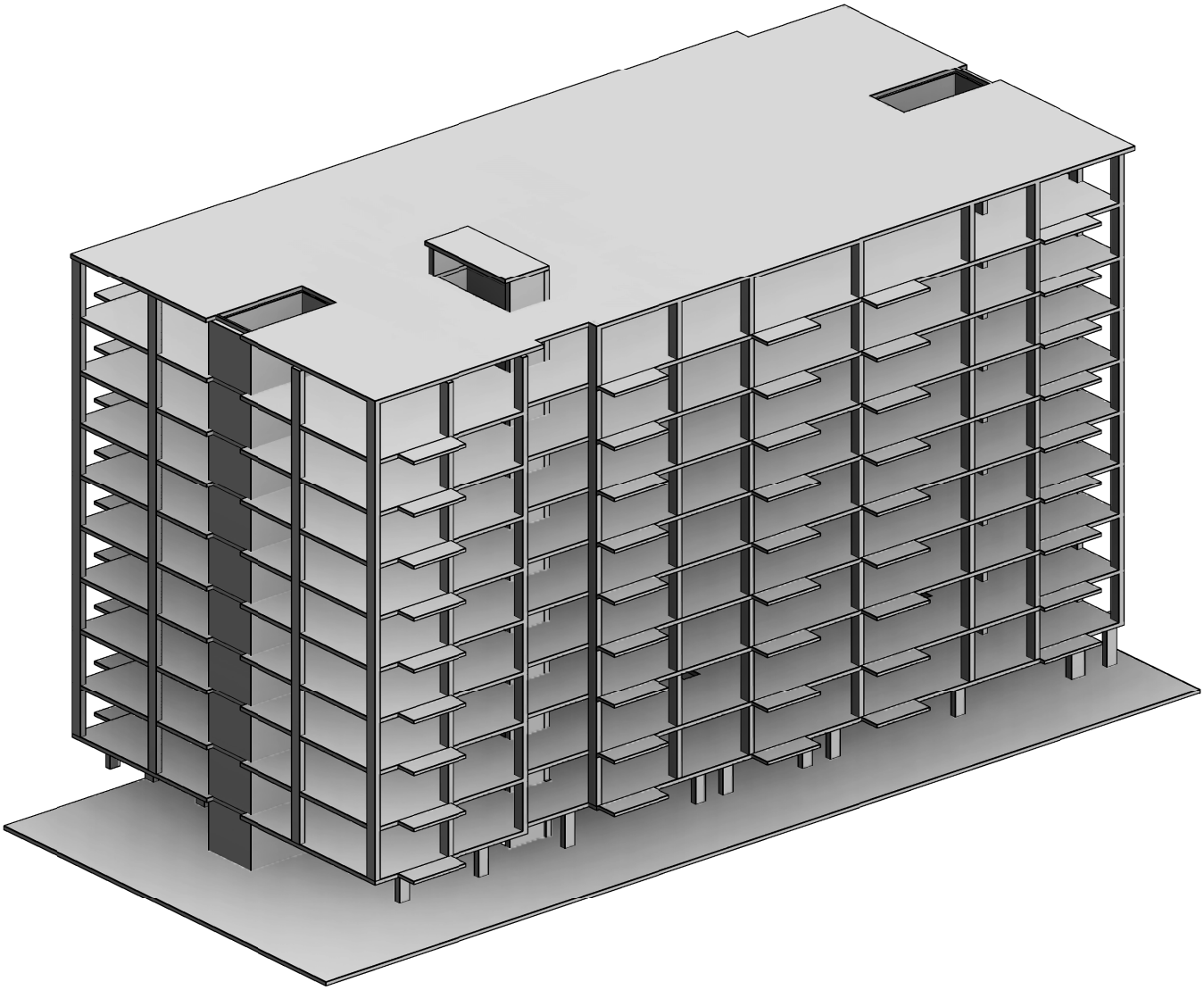

Figure A2 - Axonometric of Cast-In-Place Concrete Option

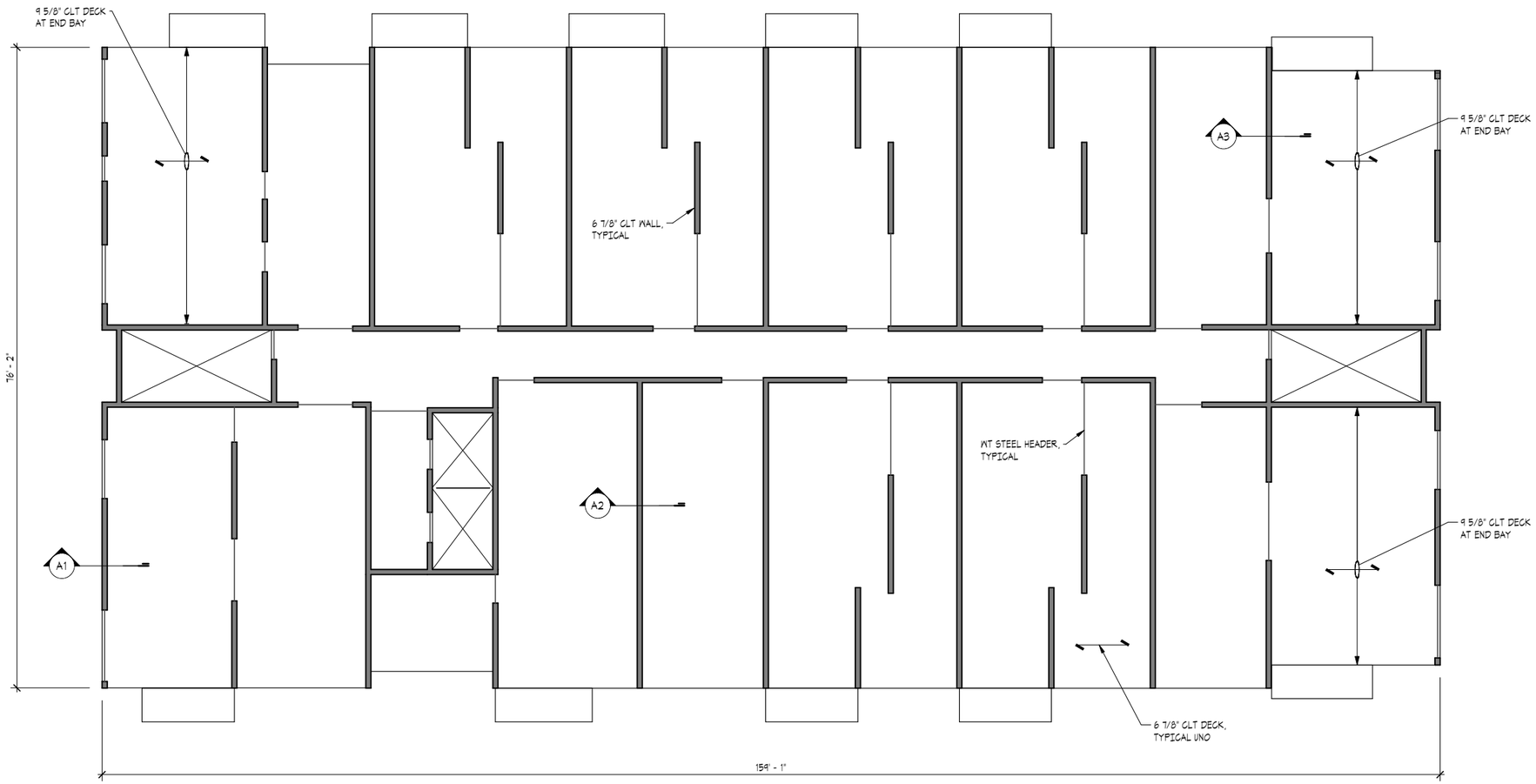

CROSS LAMINATED TIMBER FRAMING PLAN

North

0 4' 8' 16'

1/8" = 1'-0"

Figure A3 - CLT Framing Plan

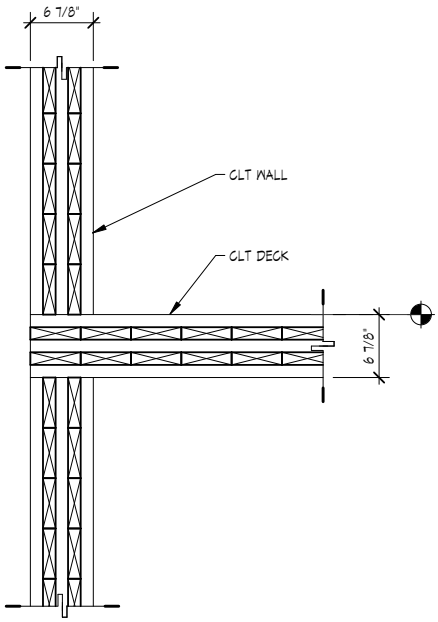

EXTERIOR DECK-TO-WALL DETAIL A1
1" = 1'-0"

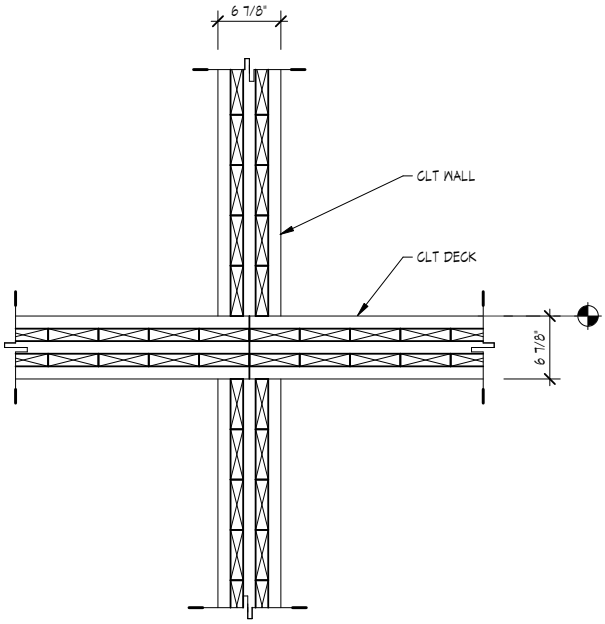

INTERIOR DECK-TO-WALL DETAIL A2
1" = 1'-0"

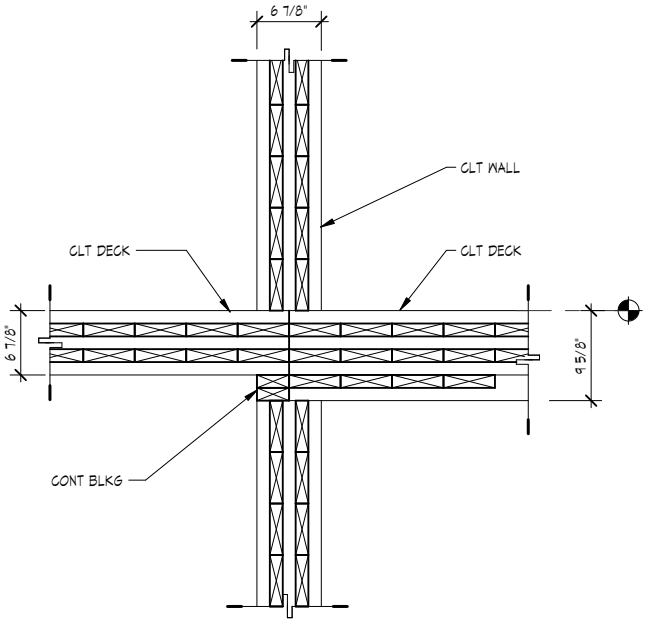

DECK-TO-WALL DETAIL AT OFFSET A3
1" = 1'-0"

Figure A4 - Cross Laminated Timber Framing Details

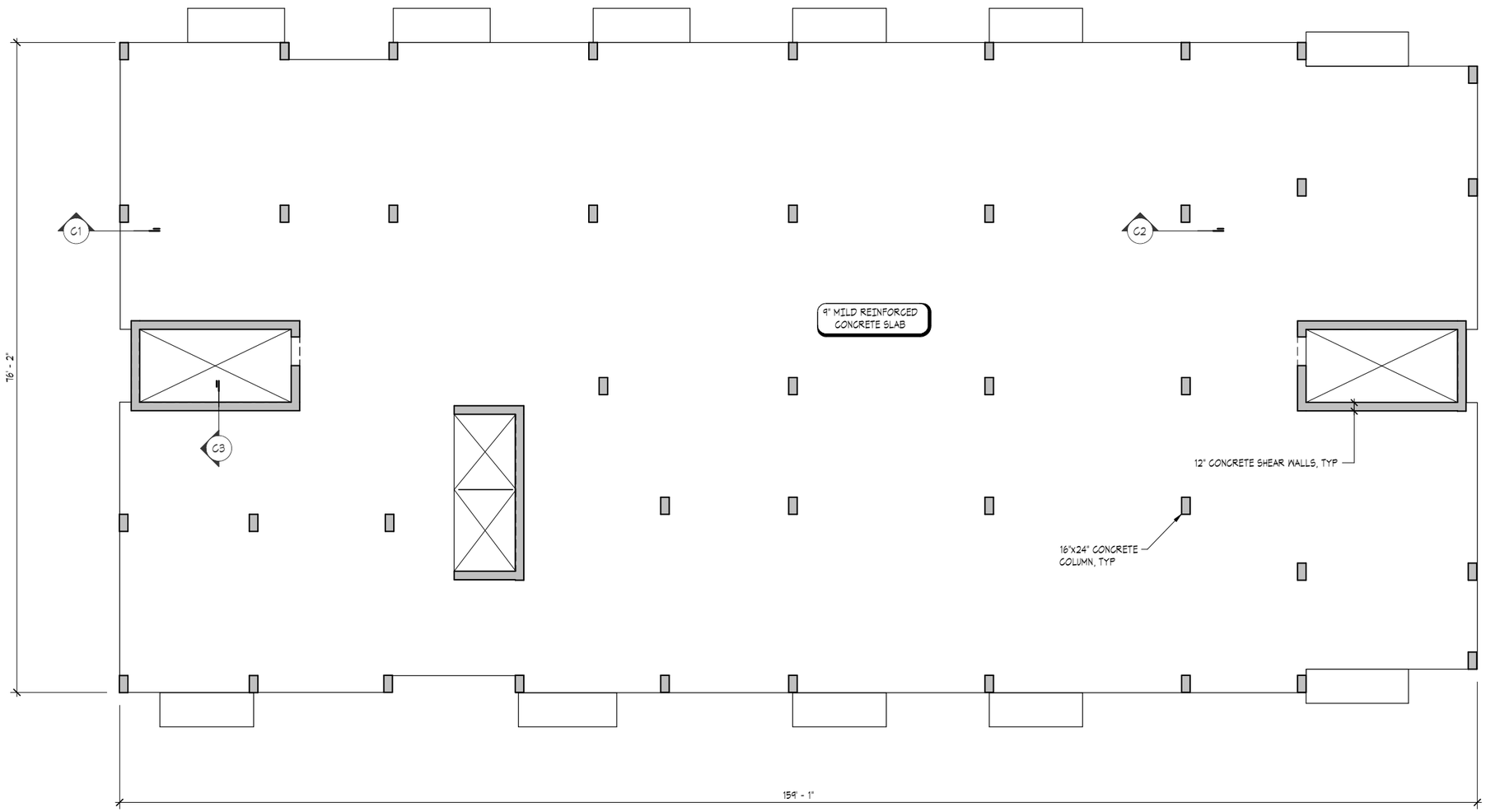

CAST-IN-PLACE CONCRETE FRAMING PLAN

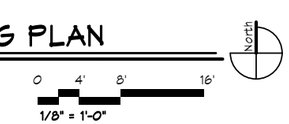

Figure A5 - CIP Concrete Framing Plan

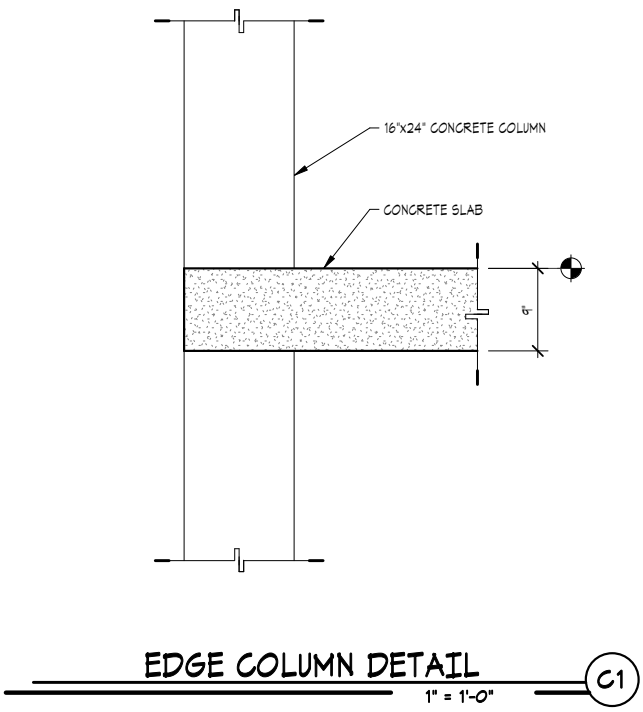

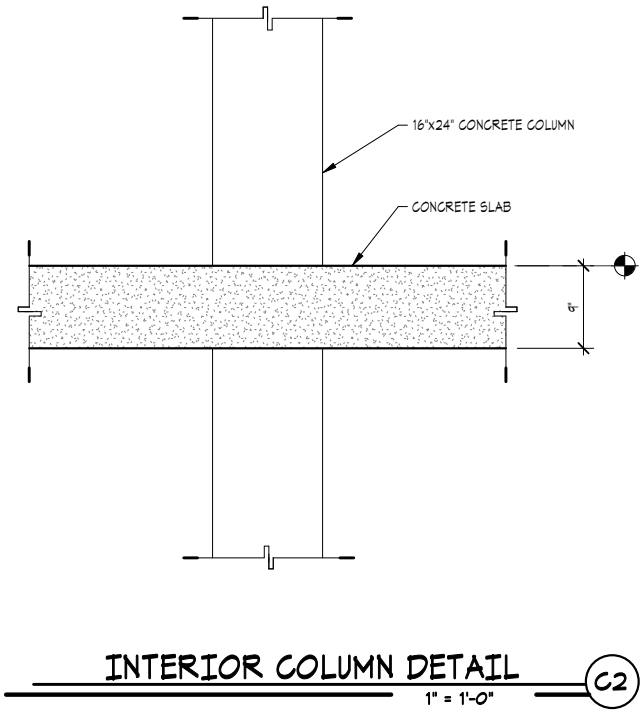

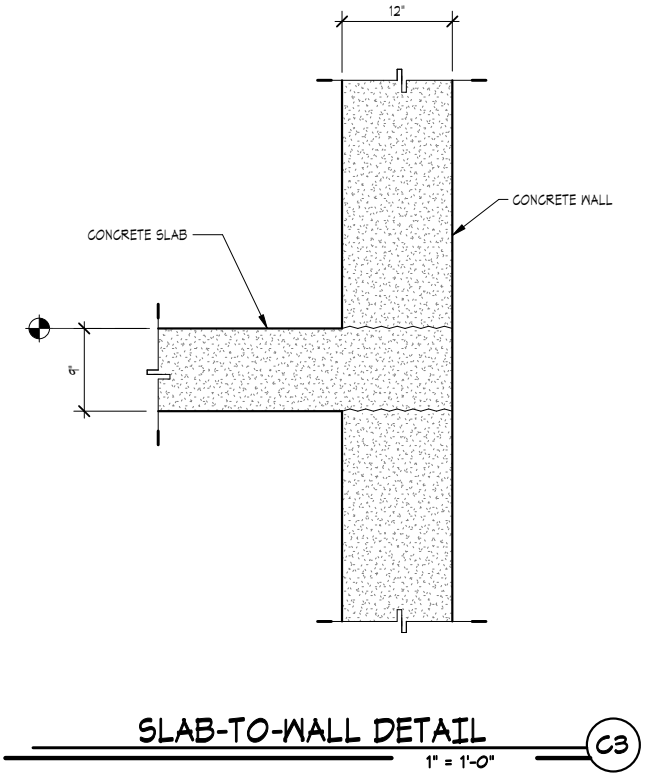

Figure A6 - Cast-In-Place Concrete Framing Details